Eşleştirme Projesi TR 08 IB EN 03
IPPC – Entegre Kirlilik Önleme ve Kontrol
T.C. Çevre ve Şehircilik Bakanlığı
www.csb.gov.tr/projeler/ippc

PERMIT APPLICATION FOR THE TWINNING CASE STUDY REFINERY UNIT

BASIC PROJECT FOR THE REQUEST OF THE INTEGRATED ENVIRONMENTAL PERMIT OF THE FACILITIES OF :

AN IMAGINARY UNIT USED AS EXAMPLE IN THE TWINNING PROJECT

LOCATED IN:

SOMEWHERE IN TURKEY

DATE OF ISSUE: APRIL 2013

PREPARED BY :	APPROVED BY :
Name Signature	Name Signature
Luis Suarez	César Seoánez
JR Cabello	

INDEX

Important preliminary explanations to fulfill and understand this document example
Non Technical Summary
Project Report
1. General data
2. Description of the installation
3. Technical characteristics
- Processes (units) in the refinery
4. Summary of the production processes (units).
5. Natural resources, raw and auxiliary materials and products.
6. Environmental emission and controls:
DISPERSION MODEL.
AIR QUALITY CONTROL NETWORK
6.1. Atmospheric emissions.
6.1.1 Channelled emissions.
BLOWING OPERATIONS
6.1.2 Non channelled emissions (fugitive emissions): VOC emissions (LDAR Program), Odour Control
6.2. Noise emissions to the surroundings of the installation.
6.3. Wastewater discharges.
STUDY OF ASSESSING TOXICITY, PERSISTENCE AND BIOACCUMULATION OF EFFLUENTS
6.4. Waste:
Waste production.
Waste management.
6.5. Soil and groundwater protection:
MONITORING PROGRAM.
6.6 Operation under not normal conditions:

IMPORTANT PRELIMINARY EXPLANATIONS TO UNDERSTAND THIS EXAMPLE:

1.- This document is just an example of how to fulfill the permit application just for one unit of a refinery, remember that this must be extended for the rest of the process units, including common units (as waste water treatment plants, desulfurisation plants…) until all the information corresponding to the whole refinery is completed. Remember always that in the permit application you must complete not only the tables provided but also you must answer all the information requests listed throughout that document.

NON-TECHNICAL SUMMARY

(a possible example)

An oil refinery or petroleum refinery is an industrial process plant where crude oil is processed and refined into more useful products such as petroleum naphtha, gasoline, diesel fuel, asphalt base, heating oil, kerosene, and liquefied petroleum gas. Our oil refinery is a large, sprawling industrial complex with extensive piping running throughout, carrying streams of fluids between large chemical processing units. In many ways, oil refineries use much of the technology of, and can be considered as, types of chemical plants.

(the non-technical summary continues in the following pages)

An oil refinery is considered an essential part of the petroleum industry. A general scheme of our installations is:

Refinery	Underground pipeline
Storage facility	Aerial pipeline
MARPOL facility	Jetty

The three installations (refinery, storage facility, MARPOL facility), and also other industrial facilities, use the pipeline to interchange products and integrate some processes so they operate as a whole. But we are going to focus our case study in the **refinery installation**.

The refinery used as example has three main production plans: fuels plant, olefins plant and cogeneration plant. The general scheme is as follows:

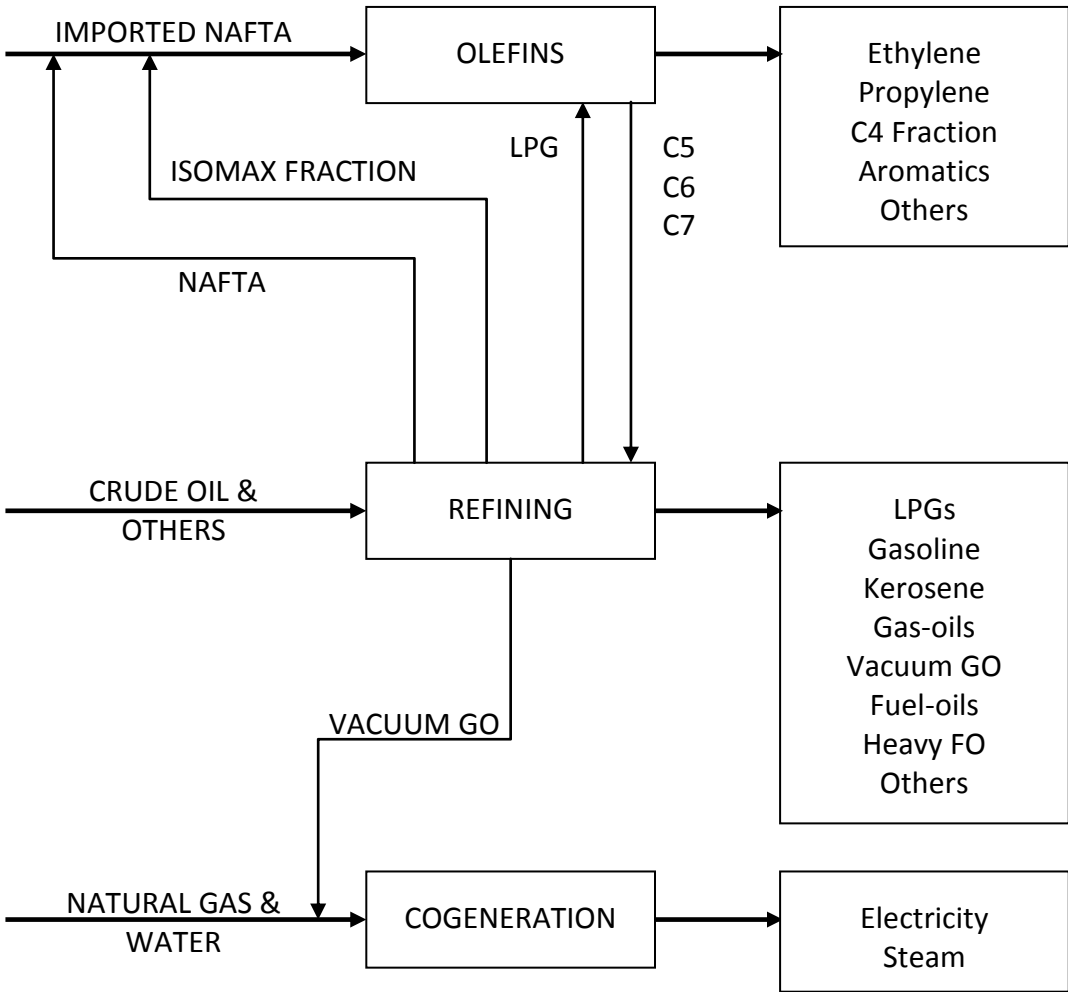

Raw or unprocessed crude oil is not generally useful in industrial applications, although "light, sweet" (low viscosity, low sulfur) crude oil has been used directly as a burner fuel to produce steam for the propulsion of sea vessels. The lighter elements, however, form explosive vapors in the fuel tanks and are therefore hazardous, especially in warships. Instead, the hundreds of different hydrocarbon molecules in crude oil are separated in a refinery into components which can be used as fuels, lubricants, and as feedstocks in petrochemical processes that manufacture such products as plastics, detergents, solvents, elastomers and fibers such as nylon and polyesters.

Petroleum fossil fuels are burned in internal combustion engines to provide power for ships, automobiles, aircraft engines, lawn mowers, chainsaws, and other machines. Different boiling points allow the hydrocarbons to be separated by distillation. Since the lighter liquid products are in great demand for use in internal combustion engines, a modern refinery will convert heavy hydrocarbons and lighter gaseous elements into these higher value products.

Oil can be used in a variety of ways because it contains hydrocarbons of varying molecular masses, forms and lengths such as paraffins, aromatics, naphthenes (or cycloalkanes), alkenes, dienes, and alkynes. While the molecules in crude oil include different atoms such as sulfur and nitrogen, the hydrocarbons are the most common form of molecules, which are molecules of varying lengths and complexity made of hydrogen and carbon atoms, and a small number of oxygen atoms. The differences in the structure of these molecules account for their varying physical and chemical properties, and it is this variety that makes crude oil useful in a broad range of applications.

Once separated and purified of any contaminants and impurities, the fuel or lubricant can be sold without further processing. Smaller molecules such as isobutane and propylene or butylenes can be recombined to meet specific octane requirements by processes such as alkylation, or less commonly, dimerization. Octane grading of gasoline can also be improved by catalytic reforming, which involves removing hydrogen from hydrocarbons producing compounds with higher octane ratings such as aromatics. Intermediate products such as gasoils can even be reprocessed to break a heavy, long-chained oil into a lighter short-chained one, by various forms of cracking such as fluid catalytic cracking, thermal cracking, and hydrocracking. The final step in gasoline production is the blending of fuels with different octane ratings, vapor pressures, and other properties to meet product specifications.

Oil refineries are large scale plants, processing from a hundred thousand to several hundred thousand barrels of crude oil a day, specifically our refinery is able to deal with 8.500.000 t/y of crude oil and transform it to several oil products. Because of the high capacity, many of the units operate continuously, at steady state or nearly steady state for months to years. The high capacity also makes process optimization and advanced process control very desirable.

And what about the environment?

One of our main objectives is to be respectful with the environment during manufacture of our products and services. We are continuously concerned with all of our products obtaining a better environmental and technical qualification.

We focus our daily efforts towards reducing the pollutants' load of our range of products as well as adapting their production and business management to the strictest environmental standards.

- Fuels with a minimum percentage of sulfur: Through its exclusive formula, we have developed fuels that have a reduced sulphur percentage in their composition resulting in a reduction of emissions of sulfur during combustion.

- Fuels adapted to the Euro 5 injection system: The Euro 5 standard is a European Commission programme of regulatory measures which establishes the technical requirements for approval of emissions of motor vehicles. Basically, Euro 5 includes an 80% reduction (with respect to the previous standard) of the particulate matter allowed to be emitted (5 mg/km). Our petrols adapt to this regulation and the injection systems that this level of emissions requires.

- ISO 14001: Environmental Management Certification: with the application of the ISO standard 14001, we help to reduce the impact on the environment, improving efficiency and offering a competitive advantage against other businesses in the sector.

Within this framework, we work on a daily basis to achieve the greatest satisfaction of our customers, whilst also adapting its business management to the strictest international standards that help to protect the environment. Our petrols are adapted to this standard and to the injection systems that this level of emissions requires.

PROJECT REPORT

The project report shall include, at least, the following basic elements related to the installation:

1. General data:

- INVENTED OIL COMPANY, SA
- VAT NUMBER: XXX-XX-X-XX
- ADDRESS: ….. …. …. TURKEY
- TELEPHONE: 111-111-111
- FAX: 222-222-222
- E-MAIL: IOILCOMPANY@PPP.COM
- The owner of the installation is the INVENTED OIL COMPANY, SA, and the legal representative is Mr. ……. The person in charge of the environmental issues is Miss. …… and could be contacted at: 111-111-111 or contactme@ppp.com.

COMPANY	
Trade name xxxxx	
Head office xxxx	
ZIP code xxxx	City xxx VAT xxxx
Province xxxx	Telephone xxxx
Fax xxxx	E-mail xxxx
INSTALLATION	
Name xxxx	
Adress xxxxxx	ZIP code xxxx
City xxxx	Province xxxxx
Telephone xxxxx	E-mail xxxx
Person of contact xxxx	

2. Description of the installation:

CHARACTERIZATION OF WORKING REGIME		
Number of staff	Permanent	500
	Temporal	1000
Working hours	Hours/year[1]	8760
Date of the start of the activity of the facilities		
Date of commissioning of the Facility: january 2000		

[1] When the installation has several power generation units, it will be considered as working hours those when at least one of those power generation units is working.

Coordinates UTM	X: 351000	Y: 4550000	UTM zone: 36
Geographical coordinates	Latitude: x^0 xx' xx''	Length: x^0 xx' xx''	
Extension of the Facility [m^2] 800.000			
Neighboring settlement areas:	- XXXX town - YYY village		
Nearby infrastructure*			
Environmental elements affected*	- Nature reserve of XXX at 60 km - Endemic flora reserved zone at 130 km		

Please find attached map at Annex I

CATEGORY OF ACTIVITIES AND FACILITIES	
Main category of activity /Facility	1.2?
Mineral and Oil refineries	
Other categories activity/Facility	1.5?
Any other facility in the refinery site (such as cogenerations)	
NACE (National Classification of Economic Activities) code: XXX-XXX-XXX	
Investments in the last 4 years targeted to environmental improvements(only for existing installations): - Sulphur recovering systems: 250 MM€ - Double capacity in ECOVs WWTP: 60 MM€	

Information on the Urban planning

The refinery is located at an industrial zone considered for "large industrial sites", please find attached urban planning compatibility certificate at Annex II.

Organization chart (hierarchical representation of the staff with their corresponding positions or jobs).

The refinery organization chart can be consulted at Annex III.

Environmental status of the site where the installation is located.

The installation is located at least at 60km of any zone with some special environmental value (like a nature reserve, etc).

Environmental impacts.

The different units are very homogeneous, not only from a technological point of view (using the same equipment: furnaces, reactors and distillation columns mainly) but also from the point of view of raw materials and obtained products (they are always crude-oil distillation products). This homogeneity means that all the units will have a similar environmental and security performance without very significant differences between them. This could be observed if we analyze the different environmental vectors as a whole, for example:

- Air emissions are very similar in all the units, as the furnaces and fuels used are the same (fuel oil and fuel gas). The only variation is the amount of fuel used in each furnace dependant on their size. In fact, the emission of all waste gases are emitted through the same stack, and the emission controls are all made in this general stack.
- With waste water the situation is very similar. The pollutants are the same in all the units changing only the amounts of pollutant generated. The final destination for the waste water in each unit is the same, the general waste water treatment plant, where all the controls of flow and quality are made.
- In the case of solid waste the situation is also the same. None of the process units generates process waste. In fact, the waste generated in these units is associated directly to maintenance and cleaning operations. Therefore, the waste generation is not a continuous process but a periodic process with a frequency related to maintenance and cleaning process: cleaning (generating oily sludge, ashes and slag) and maintenance (refractory material from furnaces, scrap metal, general waste, wood, alumina, ion exchange resins, catalysts). There is no unit producing different waste or especial ones, even the catalysts waste are similar because the reactions are also very similar (hydrocracking and hydrodesulfurisations).

3. Technical characteristics:

The approximate data about the whole refinery could be explained with the next chart:

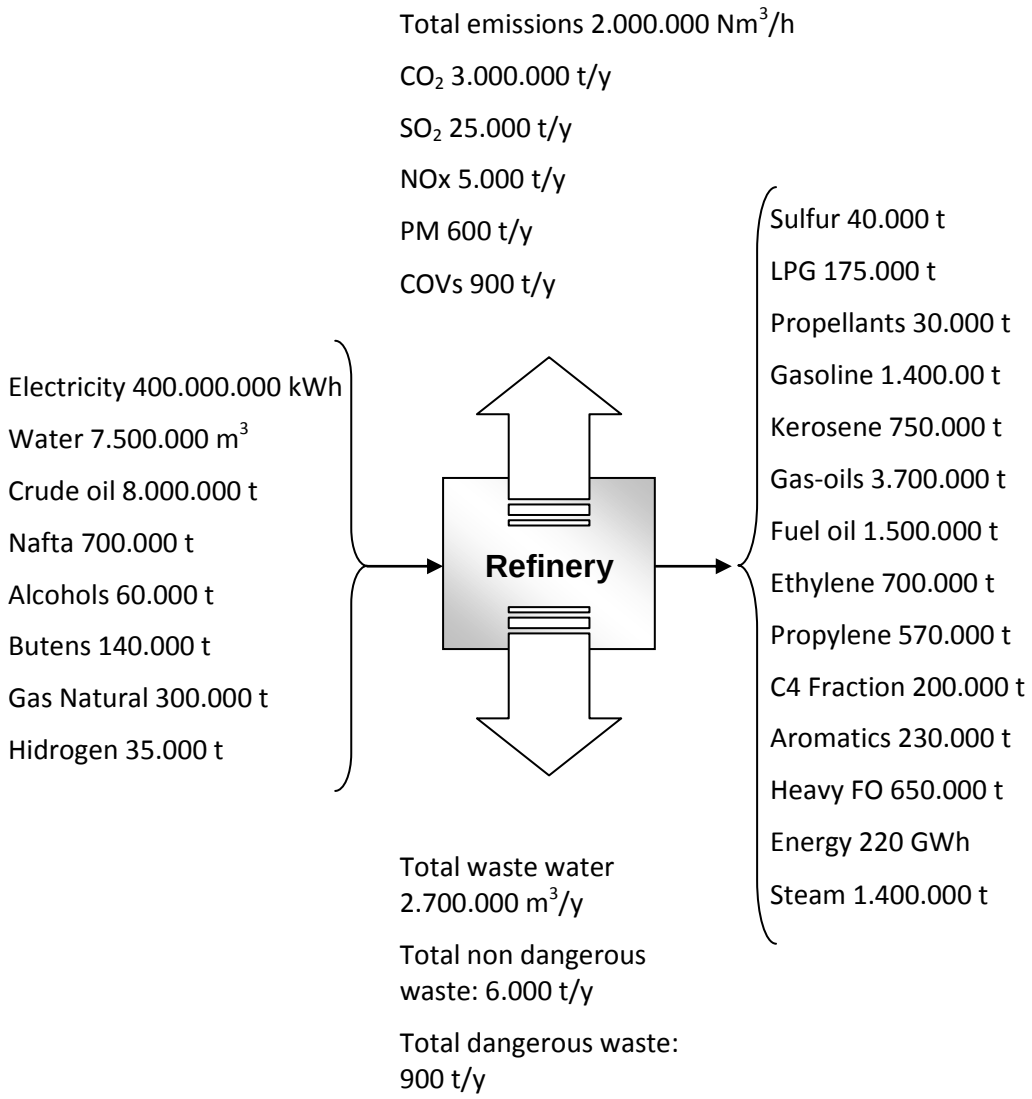

1.3.1.- <u>Desalting unit</u>

a) Purpose and principle

Crude oil and heavy residues can contain varying quantities of inorganic compounds such as water soluble salts, sand, silt, rust and other solids, together characterised as bottoms sediment. These impurities, especially salts, can lead to fouling and corrosion of heat exchangers (crude preheaters) and especially the crude distillation unit

overhead system. In addition, salts are detrimental to the activity of many of the catalysts used in the downstream conversion processes and sodium salts stimulate coke formation (e.g. in furnaces). The principle of desalting is to wash the crude oil or heavy residues with water at high temperature and pressure to dissolve, separate and remove the salts and solids.

b) Feed and products streams

Crude oil and/or heavy residues (oily feedstock) and reused and fresh water are the feedstreams to the desalter and washed crude oil and contaminated water are the outputs of the desalting processes. The water phase from the overhead crude distillation unit of the overhead and other used water streams are normally fed to the desalter as washwater.

c) Process description

After preheating to 115 – 150 °C, the oily feedstock is mixed with water (fresh and preused water) in order to dissolve and wash out the salts. Intimate mixing takes place between the oil and the wash water together in a globe valve mixer, a static mixer or a combination of both. The water must then be separated from the oil feedstock in a separating vessel by adding demulsifier chemicals to assist in breaking up the emulsion and/or, more commonly, by applying a high potential electric field across the settling vessel to coalesce the polar salt water droplets. Either AC or DC fields may be used and potentials from 15 to 35 kV are used to promote coalescence.

The separation efficiency depends on pH, density and viscosity of the crude oil, as well as the volume of wash water used per volume of crude. Many refineries have more than one desalter and multiple-stage desalters also exist.

The washwater containing dissolved hydrocarbons, free oil, dissolved salts and suspended solids is further treated in an effluent treatment plant.

Where bottoms sediments are critical in downstream process units, desalters are equipped with a bottom flushing system to remove settled solids.

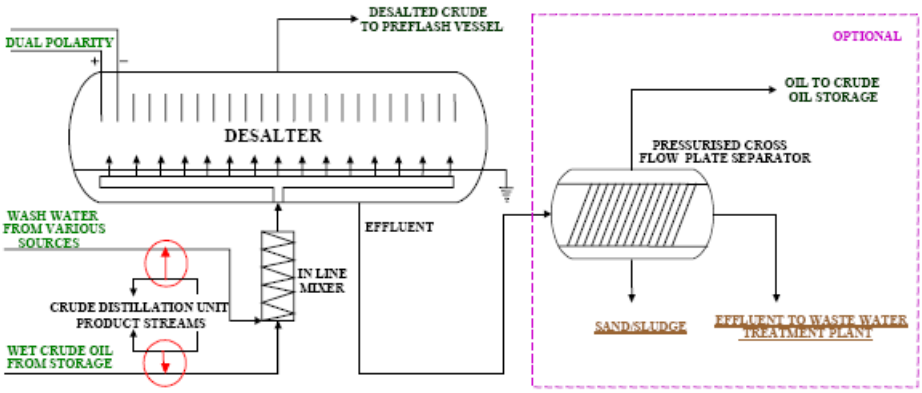

Simplified flow diagram of a crude desalter

1.3.2.- Primary distillation units

This section includes atmospheric and vacuum distillation. These two primary distillations are preceded by crude oil desalting and they are the first and fundamental separation processes in a refinery.

a) Purpose and principle

In Atmospheric Crude Oil Distillation Unit (CDU), crude oil is heated to elevated temperatures and then generally subjected to distillation under atmospheric pressure (or slightly higher) separating the various fractions according to their boiling range. Heavier fractions from the CDU bottom, which do not vaporise in this column, can be further separated later by vacuum distillation, which is simply the distillation of petroleum fractions at a very low pressure to increase volatilisation and separation whilst avoiding thermal cracking. The high vacuum unit (HVU) is normally the first processing step in upgrading atmospheric residue followed by downstream refining units. HVU produces feedstocks for cracking units, coking, bitumen and base oil units. The contaminants from the crude oil stay predominantly in the vacuum residue.

b) Feed and products streams

The crude oil feed to the crude distillation unit is supplied from the crude oil storage tanks after desalting. Normally all crude oil entering a refinery passes through a crude distillation unit. In addition to that, it is common practice that off-specification product streams are reprocessed in the CDU.

The products from the crude distillation unit, ranging from the lightest to the heaviest cut are:

- naphtha and light components (boiling <180 °C/C1-C12 lights, naphtha and gasoline)
- kerosene (boiling range 180 – 240°C – C8-C17)
- light gasoil (boiling range approximately 240 - 300 °C/C8-C25)
- heavy gasoil (boiling range approximately 300 – 360 °C/C20 - C25)
- atmospheric residue (boiling >360 °C/>C22).

The overhead of this column is the light fraction, non-condensable refinery fuel gas (mainly methane and ethane). Typically this gas also contains hydrogen sulphide and ammonia gases. The mixture of these gases is known as 'sour gas' or 'acid gas'. A certain amount of it passes through the condenser to a hot well, and is then discharged to the refinery sour fuel system or vented to a process heater, flare or other control device to destroy hydrogen sulphide.

The main feed stream to the HVU is the bottom stream of the crude oil distillation unit, referred to as atmospheric or long residue. In addition the bleed stream from the hydrocracker unit (if applicable) is normally sent to the HVU for further processing. The products from the HVU are light vacuum gasoil, heavy vacuum gasoil and vacuum residue. Light vacuum gasoil is normally routed to the gasoil hydrotreater(s), heavy gasoil is normally routed to a fluid cat cracker and/or hydrocracker unit. The vacuum residue can have many destinations such as visbreaking, flexicoking or delayed coking, residue hydroprocessing, residue gasification, bitumen blowing or it may go to the heavy fuel oil pool.

c) Process description of Atmospheric distillation

Distillation involves the heating, vaporisation, fractioning, condensation, and cooling of feedstocks. The desalted crude oil is heated to about 300 – 400 ºC and fed to a vertical distillation column at atmospheric pressure where most of the feed is vaporised and separated into its various fractions by condensing on 30 to 50 fractioning trays, each corresponding to a different condensation temperature. The lighter fractions condense and are collected towards the top of the column. The overhead hydrocarbon vapours are condensed and accumulated in the overhead reflux drum of the main fractionator. In this drum sour water, light fractions (about 0.5 % on crude charge) and stripping steam (1.5 % on crude) are separated from the hydrocarbon liquid. The overhead hydrocarbon liquid, so called the naphtha minus stream, is commonly fed directly to the downstream naphtha treater.

Within each atmospheric distillation tower, a number of side-streams of low-boiling point components are removed from different trays in the tower. These low-boiling point mixtures are in equilibrium with heavier components which must be removed. The side-streams are each sent to a different small stripping tower containing four to ten trays with steam injection under the bottom tray. The steam strips the light-end components from the heavier components and both the steam and light-ends are fed back to the atmospheric distillation tower above the corresponding side-stream draw tray. Most of these fractions generated in the atmospheric distillation column can be sold as finished products after a hydrotreatment, or blended with products from downstream processes. Many refineries have more than one atmospheric distillation unit.

The operating conditions of the tower are based on the properties of the crude oil and the desired product yields and quality. Every refinery has a crude distillation unit designed for a selected crude (mix).

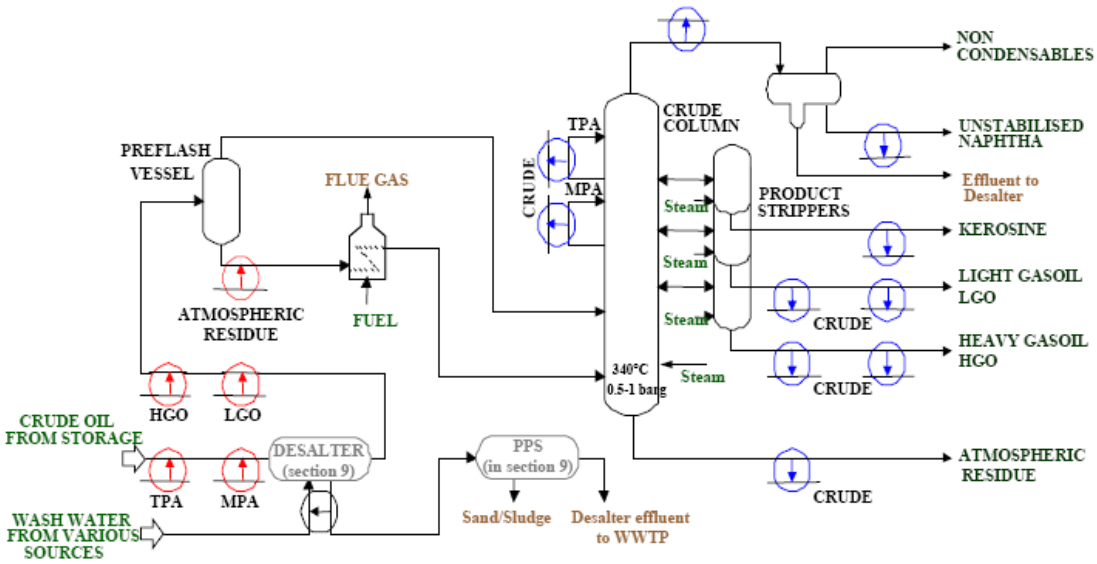

Simplified process flow diagram for a crude distillation unit

d) Process description of vacuum distillation

Atmospheric residue is heated up to 400 °C, partially vaporised (30 – 70 % by weight) and flashed into the base of the vacuum column at a pressure between 40 and 100 mbar (0.04 to 0.1 kg/cm^2). The vacuum inside the fractionator is maintained with steam ejectors, vacuum pumps, barometric condensers or surface condensers. The injection of overheated steam at the base of the vacuum fractionator column further

reduces the partial pressure of the hydrocarbons in the tower, facilitating vaporisation and separation. The unvaporised part of the feed forms the bottom product and its temperature is controlled at about 355 °C to minimise coking. The flashed vapour rising through the column is contacted with wash oil (vacuum distillate) to wash out entrained liquid, coke and metals. The washed vapour is condensed in two or three main spray sections. In the lower sections of the column, the heavy vacuum distillate and optional medium vacuum gasoil are condensed. In the upper section of the vacuum column the light vacuum distillate is condensed. Light (noncondensable) components and steam from the top of the column are condensed and accumulated in an overhead drum for separating the light non-condensables, the heavier condensed gasoil and the water phase.

The most important operational aspect of a vacuum unit is the quality of the heavy vacuum gasoil, especially when this is fed to a hydrocracker unit. The Concarbon level and/or metal content is very critical for a hydrocracker unit and depends on the operation and performance of especially the wash oil section in the vacuum distillation unit as well as the desalter in the crude distillation unit.

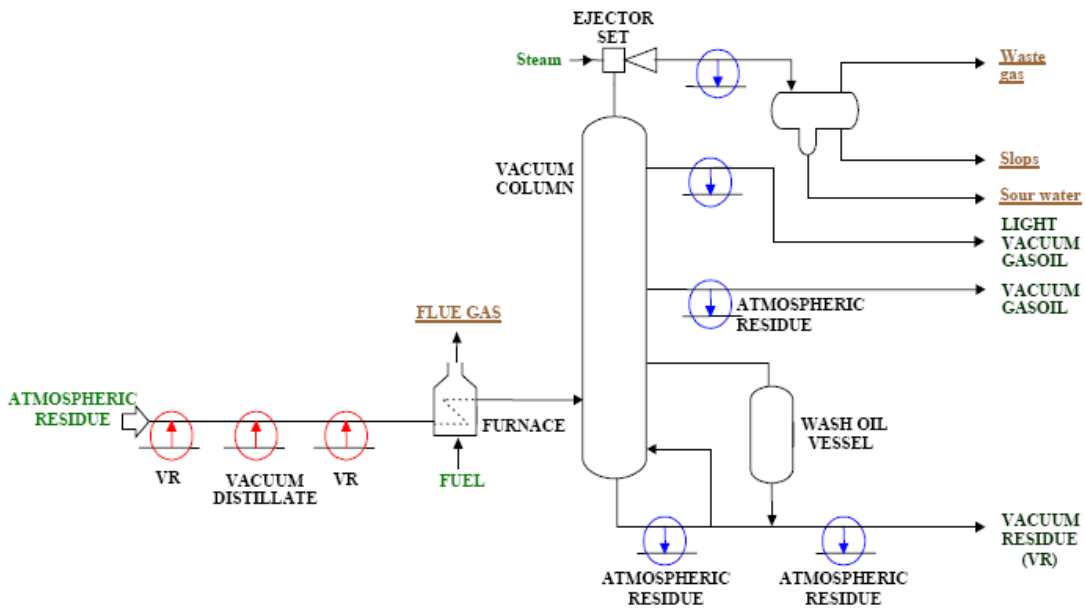

Simplified process flow scheme for high-vacuum distillation unit

4. Summary of the production process (units).

Remember that this must be done for all the units, in this example we will focus in only 1 unit

The primary distillation of crude oil is the very first part of the refinery, the chart of the unit is as follows:

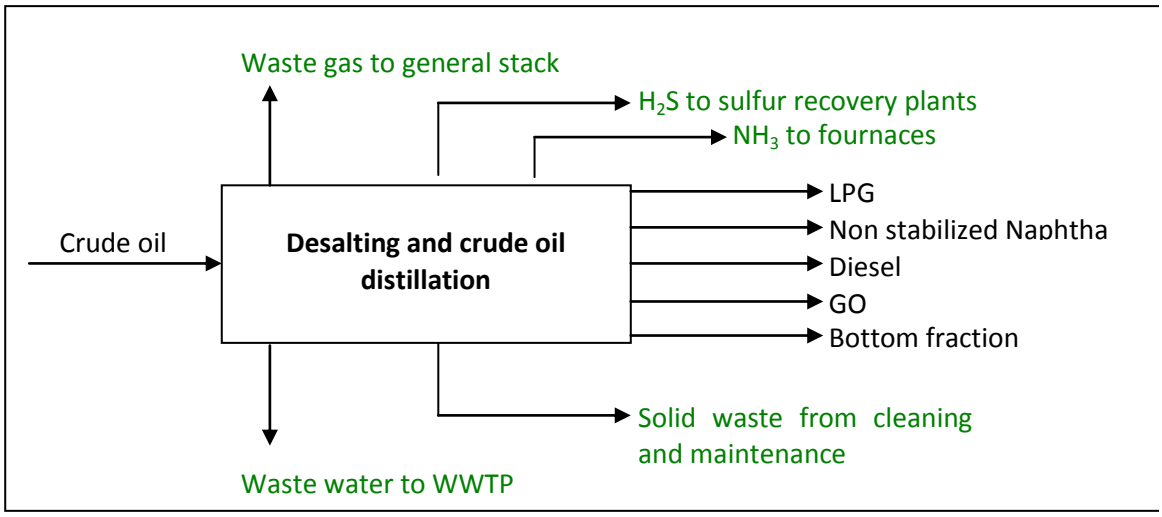

The main process to obtain all the different products from crude oil is the crude oil distillation. The refinery used for this case study has two units of crude oil distillation.

The two units havea global capacity of 8.500.000 t of crude oil a year. In these units, the crude oil is separated into different fractions depending on their boiling point: LPG, naphtha, kerosene, diesel, etc.

We can find the follow sections and equipment:

- Feeding system with pumps that transport the crude oil from storage tanks to the units, giving the proper pressure to be able to introduce them to the process.
- Heat exchangers, that heat the crude oil before and after the desalting units using the hot flows from the same unit.
- Desalting units, where the salt within the crude oil is eliminated through water injection.
- Loading furnace, to increase the temperature of crude oil until the necessary temperature for fractioning.
- Distillation column, where all the crude oil components are separated into fractions, from lightest ones, extracted through the head of the column, until the heaviest ones, extracted through the bottom of the column. There are also several lateral extractions for intermediate products.
- Stripping columns, where the lightest products of the three intermediated fractions are removed. The objective is to remove light components from kerosene, diesel and atmospheric gas oil, in order to reduce their ignition point.

The fractions obtained in the crude distillation are:

- LPG
- Non stabilized naphtha
- Kerosene
- Diesel
- Atmospheric GO
- Atmospheric waste, that is the bottom fraction that is not possible to distillate under atmospheric conditions.

Nearly all that fractions are processed afterwards in other refinery units to obtain final products.

- LPG and naphtha is used downstream in a concentration gas unit to obtain fuel gas, concentrated LPG and estabilyzed naphtha. Fuel gas is desulfurated and used to produce energy in the cogeneration units and sold. LPG is conducted to a “merox” unit where propane and isobutene are produced, the propane is sold and isobutene is sent to a isobutene unit to obtain propellants and butane. Naphtha is sent to re-distillation unit and sent to isopentane unit and a merox unit to finally blend it in the final formulation of gasoline.
- Kerosene is desulfurated and used as aviation fuel or blended in the final formulation of automotive diesel.
- Disesel is desulfurated and blended in the final formulation of automotive diesel.
- Atmospheric gas oil is desulfurated and blended in the final formulation of automotive diesel.
- Atmospheric waste is used as heavy fuel oil, or is re-distillated in a vacuum distillation unit and different grades of gas oil are obtained (heavy and light vacuum gas oil). Also a residual flow is obtained, called vacuum waste, that is sent to a visbreaking unit where naphtha could be recovered and the final waste is sent to a blending unit where different grades of fuel oil are obtained.

The most important parameter in distillation process is the temperature, which is controlled at the exit of the loading furnace, and must be around 350 ºC. Operation pressure is approximately of 0,7 kg/cm^2 at the head of the column.

The furnace has a pre-heating system to warm the entering combustion air. The system consists of the recovering of the energy from the combustion exhaust air, that left the unit at a very high temperature, to warm the combustion air that will be used in the furnace.

With that heat exchange, the combustion air is already pre-heated before entering the furnace and that involves less consumption of fuel oil in the furnace itself. So that system achieves a double objective: energy saving and less polluted air emissions.

From the point of view of waste water it must be said that this unit has a waste water pre-treatment system in order to re-use water in the unit itself. The process is known as "double stripping of acid waters" and consists of collecting all the condensated flows of process steam, and remove H_2S and NH_3 and re-use the water sending it to the crude oil desalting unit. The H_2S is recovered in the sulfur recovery plants (super Klauss processes) and the NH_3 is burned in the crude oil furnaces itself.

5. Natural resources, raw and auxiliary materials and products:

The most important raw material in this unit is the crude oil, but there are also some important auxiliary raw materials.

Raw material	Consumption	Storage	Storage facilities
Crude oil	8.500.000 t/y	570.000 t	7 atmospheric cylindrical tanks with floating roof
Catalyst	90 t/y	380 t	Several tanks and storage facilities
Anthracite and silica sand	30 t/y	41 t	Several tanks and storage facilities
Rasching/pall rings	7 m^3/y	19 m^3	Several tanks and storage facilities
Ceramic balls	23 t/y	15 t	Several tanks and storage facilities
Steam and condensate treatment products	8.000 t/y	5 t	Several tanks and storage facilities
Additives	13.000 t/y	14 t	Several tanks and storage facilities
Oils and greases	4.500 t/y	58 t	Several tanks and storage facilities
Other	90.000 t/y	150 t	Several tanks and storage facilities

And the obtained products (most of them are the output after other subsequent processes but all of them originate in this unit) are:

Product	Amount produced	Storage	Storage facilities
LPG	175.000 t/y	16.000 t	Pressured aerial spheres
Kerosene	745.000 t/y	60.000 t	Atmospheric aerial tanks
Fuel oil	1.500.000 t/y	325.000 t	Atmospheric aerial tanks
Gas oil	3.700.000 t/y	400.000 t	Atmospheric aerial tanks
Gasoline	1.400.000 t/y	120.000 t	Atmospheric aerial tanks

Annual consumption: crude oil

Year	Annual amount (MT)	% sulphur (average)

2012	8.500.000	1,3%
2011	8.450.000	1,5%
2010	8.510.000	1,5%
2009	8.100.000	1,6%

Annual consumption: water and electricity

Year	Water Annual amount (m^3)	Electricity (selfconsumption) (MWh)
2012	7.500.000	450.000
2011	7.450.000	440.000
2010	7.510.000	441.000
2009	7.100.000	438.000

Electricity generated: (cogeneration units)

Year	**Electricity generated(MWhb)**
2012	445.000
2011	435.000
2010	436.000
2009	433.000

Auxiliary materials and other products consumed (average)

See point 5

6. Environmental emission and controls:

DISPERSION MODEL

An explanation and a summary of a dispersion model could be included in Annex VI

AIR QUALITY CONTROL NETWORK

The data collected must be sent to local authorities following the protocols set for the "air emissions network" through radio or telephone connection.

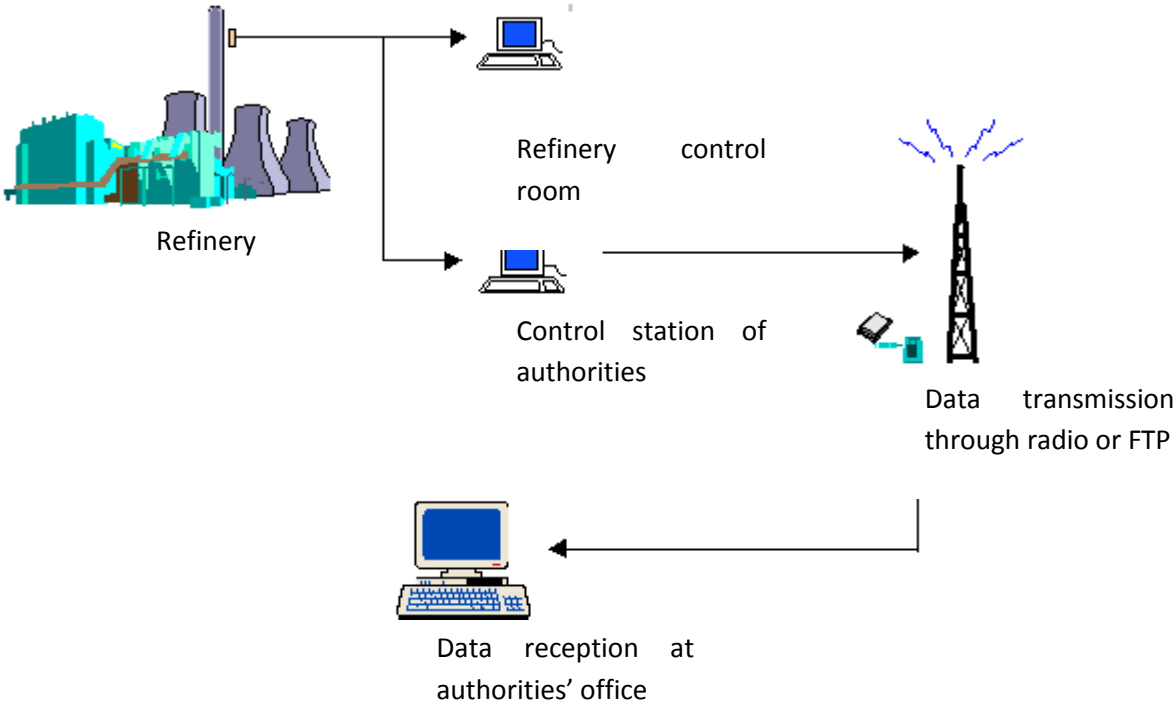

6.1. Atmospheric emissions

6.1.1. Channelled emissions:

<u>Channeled air emissions</u>

The total polluted air emissions in the example unit are channeled through the same general stack located at:

UTM X: 351.000

UTM Y: 4.550.000

The height of the stack is 113,8 m and the inner diameter is 7,76 m.

There are no especial correcting measures for air pollutants because the emissions are controlled by improving the quality of fuels used to heat the unit.

The stack is equipped with four measurement points and a platform. The measurement points are located at 3 times the diameter length from the outside and 6 times the diameter length from the last perturbation.

The general parameters of emission are:

- Flow: 1.200.000 m^3/h
- T: 200 ºC
- O_2: 12,5%

The pollutants emitted are:

- Opacity: 1 – 2 opacity index
- SO_2: 500 ppm
- NOx: 100 ppm
- H_2S: < 0,2 mg/Nm^3
- CO: 15 ppm
- PM: 50 mg/Nm^3

These data and other data about weather and pollutants measured by a monitoring organization are the data used to feed the dispersion model explained in the previous point.

In addition, some of the pollutants are controlled continuously with automated measurement systems calibrated according to EN 14181. The parameters and pollutants controlled continuously are:

- SO_2
- NO_X (expressed as NO_2)
- PST
- O_2
- Flow
- T

According to the norm EN 14181 the calibration program is the following:

- All the automated measuring systems (AMS) fulfill the assurance quality level 1 (QAL1) according to the manufacturer (QAL1 certificate)
- Every year an annual surveillance test (AST) is practiced, with a previous functionally test
- After the installation of the AMS and every four years, a procedure (QAL 2) to calibrate the AMS and determine the variability of the measured values obtained. The procedure consists in comparing 15 values provided by the AMS with the same values obtained through a reference method and calculates if the difference is statistically significant or not..

- A periodical procedure (QAL 3) to maintain and demonstrate the required quality of the measurement results during the normal operation of an AMS, by checking that the zero and span characteristics are consistent with those determined during the certification.

In addition, the way how all the generated data is collected is checked and has to be completely confirmable for the authorities.

Emissions through flares

This unit and the rest of the refinery use a flare as a safety system to treat discharges from any unit in case of emergency shutdown, electrical failure or any other anomalous situation. To this system are also sent other gases from purges, safety valves, vents or any other discontinuous combustible flows to avoid sending them directly to the atmosphere without being treated.

To estimate the work time of the flare it could be assumed that it is running 24h/day all the year, because, although there is no continuous flow sent to the flare, there are a lot of discontinuous flows sent to it so it could be assumed that it will be running almost in a continuous way.

The flare is located at:

UTM X: 350.000

UTM Y: 4.500.000

The height of the flare is 100 m and the inner diameter is 1,5 m.

As there are a lot of units sending flows to the flare the composition of combusted gases in this facility could be very different depending on the moment when is checked. As an approximation, all the units that can send flows to the flare have been analyzed and quantified, and an average composition has been calculated:

Approximate composition of gases sent to the flare (volumetric %):

- Hydrogen 50%
- Methane 20%
- Nitrogen 10%
- Ethane and ethylene 6%

- C3 5%
- C4 4%
- C5+ 3.5%
- SH_2 1.5%

The maximum capacity of that flare is 1.140 t/y

In addition, it must be mentioned that immediately before the flare, a recovery system is located. This recovery system is basically a compressor with a capacity of liquefy 2t/h of gases that will be reused in the process as fuel-gas. There is a double benefit in the use of this system, in one hand there is a reduction in air emissions and in the other and, there is a reduction on energy consumption.

Emission point			Flow (Nm^3/h)	Hours of Emission / day	T (ºC)	O_2(%)	Pollutants			Emission point height above ground (m)	Diameter (m)	Abatement system	Source of the data / Observations
No	Unit label[2]	Description					Pollutant	Concentration (monthly average) (mg/Nm^3)	Mass flow (kg/h)				
1	XXX	General stack	1.200.000	8760	200	12.5%	Opacity	1-2 OI	-	113.8	7.76	Process fuel desulfuration. Low NOx burners, T and P control…	measurements
							SO_2	500 ppm	1600 kg/h				
							NO_X	100 ppm	170 kg/h				
							H_2S	< 0.2 mg/Nm^3	<0.24 kg/h				
							CO	15 ppm	22 kg/h				
							PM	50 mg/Nm^3	60 kg/h				

[2] The situation of the stack in the refinery could be consulted at Annex IV

- Plan for Monitoring and Control: It will contain the following data: Emission point, pollutant, sampling, control and data collection, transmission and registration system. The plan may be in any case subject to the modifications considered relevant by the Competent Authority.

Emission point (number and unit label)	Pollutant	Monitoring and Control			
		Internal/ External[3]	Frequency (continuous, daily...)	Description of sampling method	Reports
1 - XXX	Opacity	Internal	continuous	Extractive methods with filter opacity evaluation (Bacharach and Ringlemann scales)	
	SO_2	Internal	continuous	Extractive with cooling and optical analysis method (ultraviolet fluorescence)	
	NO_X	Internal	continuous	Extractive with cooling and photometrical measure of chemo-luminescence analysis method	
	H_2S	Internal	continuous	Extractive with cooling and optical analysis method (ultraviolet fluorescence)	
	CO	Internal	continuous	Extractive with cooling and chemical method analysis (variation of conductivity of SnO_2)	

BLOWING OPERATIONS

If necessary, as stated in the permit application template, when the blowing operations to clean pipes are frequent because of the use in some units of heavy and solid fuels, the applicant must take into account their impact and possible measures to minimize it.

[3] Here by "internal" it is meant that the monitoring and control is done by the operator of the installation, and "external" means that this task is performed by an external company.

The operational blowing program must specify the frequency and average duration of every kind of blowing operation. It is important to include in this program a methodology to synchronize the blowing operations for those units that emit through the same stack.

6.1.2. Non channeled emissions (fugitive emissions):

Diffuse air emissions

The diffuse emissions in this refinery are caused by the presence of volatile hydrocarbons flowing through pipes, equips, storage tanks, etc. and where no total sealing could be guaranteed, because of the joints, vents, loads and unloads, etc.

As the refinery is working continuously, there are diffuse air emissions also in a continuous way. It is possible to distinguish two kind of diffuse emissions:

Process diffuse emissions: Directly related with the kind of equipment (valves, flanges, pumps, compressors, etc.) their dimensions and the volatility of the hydrocarbons flowing through that equipment.

Storage diffuse emissions: These emissions depend on the kind of storage tank, dimensions, color, conservation, type of product, weather conditions and number of operations of load and unload.

In general, we can say that the pollutant emitted are volatile hydrocarbons, and there are estimations about the amount of diffuse emissions with a simulation program. Using an emission estimation program and the EPA emission factors, the result is that the emissions are of 608 t/y only for the storage tanks and 77 t/y for the distillation unit.

Emission source (storage area,...)			**Pollutant**
No.	**Unit Label**	**Description**	
1	**xxx**	**Aromatic above-surface tank**	**Benzene**

...	...	...	

- Estimation or calculation of fugitive emissions arising from the installation, expressed as a mass flow for each pollutant, describing the procedure of estimation / calculation used to obtain the quantities. If the estimate is made from real measurements, the relevant certificate and an analytical plan in which sampling points are defined must be attached.
- This emission points must be placed in the map of Annex 0.
- Note : International EFs (emission factors) are available.

VOC emissions and Odour emissions control data must be provided as it is explained at the permit application model.

Between the diffuse emissions is possible to distinguish to kinds of emissions:

- Continuous emissions: Including process focus (those what are not canalized) and other vents (storage or production tanks, products loading, etc.).
- Non continuous emissions: Including fugitive emissions (Fugitive emissions of hydrocarbons in valves, flanges, connections, pump and compressors seals, etc.) and other non continuous emissions like emissions from waste water treatment plant, spills, process water cooling, etc.

The methodology used is the standard method USEPA 21, in order to obtain real data that allow calibrating subsequent estimations that will assume a sampling extrapolate to the rest of installations.

This method is systematically recommended and used by EPA in the implantation of LDAR systems (Leak Detection and Repair), that are systems considered as a BAT for refining system with a prevision of a 40-60% of reduction in diffuse emissions of VOCs.

6.2. Noise emissions to the surroundings of the installation:

There are a lot of points where noise can be generated as compressors, reactors, cogenerations, pumps, flare, etc. Considering the distance between the refinery and the nearest populated zones, it is not expected to generate problems to the neighborhood.

Some measurements have been performed in the perimeter of the refinery:

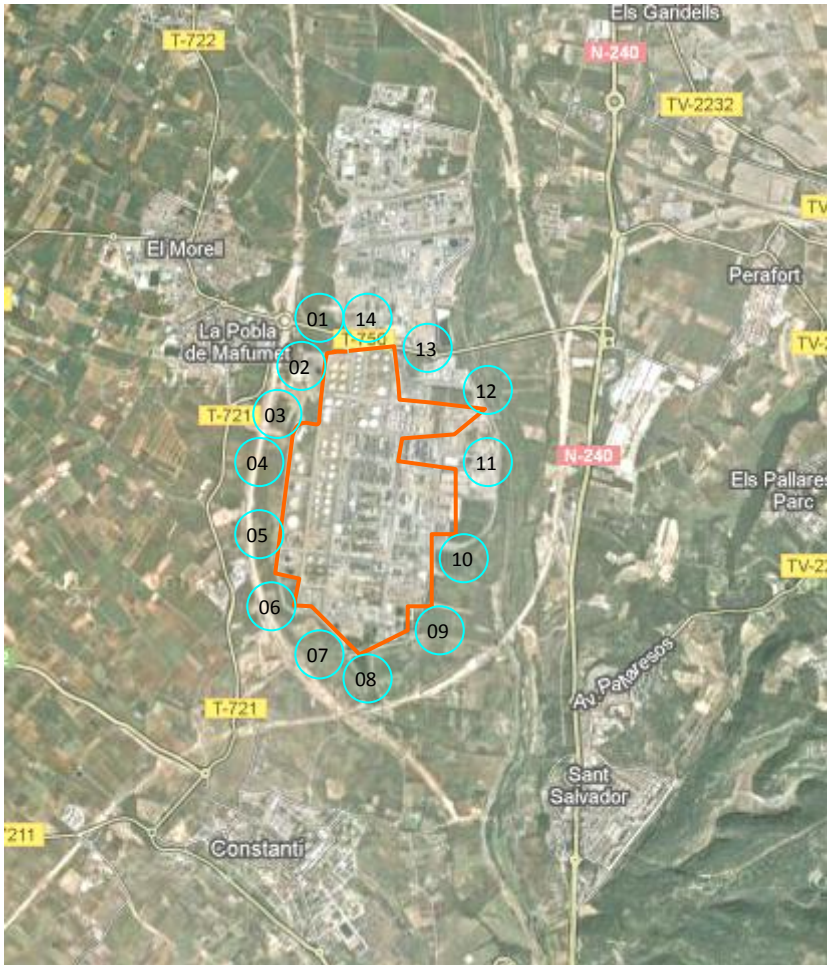

Point	Equivalent Level Day (dBA)	Equivalent Level Night (dBA)
01	60,4	61,4
02	60,0	60,1
03	52,7	52,0
04	51,8	51,0
05	48,8	45,8
06	44,3	40,3
07	46,9	43,9
08	52,5	52,8
09	60,4	60,0
10	68,2	68,1
11	64,2	64,4
12	64,9	64,9
13	52,1	50,1
14	60,6	60,4

In addition there are some isolation elements in order to reduce the emission of noise:

- Soundproofing cabins to encapsulate the cogeneration units
- Absorbent materials of special mineral wool installed at the exit of valves and pipelines.
- Noise dampers in some electrical motors
- Silencers in some critical vents
- Sound screens and baffles to surround the ventilator of crude oil pumps

6.3. Wastewater discharges:

Annex V includes, in the map of the refinery (Annex 0 of the application), the different waste water flows specifying, particularly, the rain waters collection network and, when applicable, its intermediate storage points.

The total amount of waste water generated in the refinery is sent to a Waste Water Treatment Plant (WWTP). The kind of treatment is primary, physicochemical and biological. The total maximum capacity of treatment is 290 m^3/h.

The waste water in the refinery is separated into different flows depending on their quality and pollutants, the general scheme being as follows:

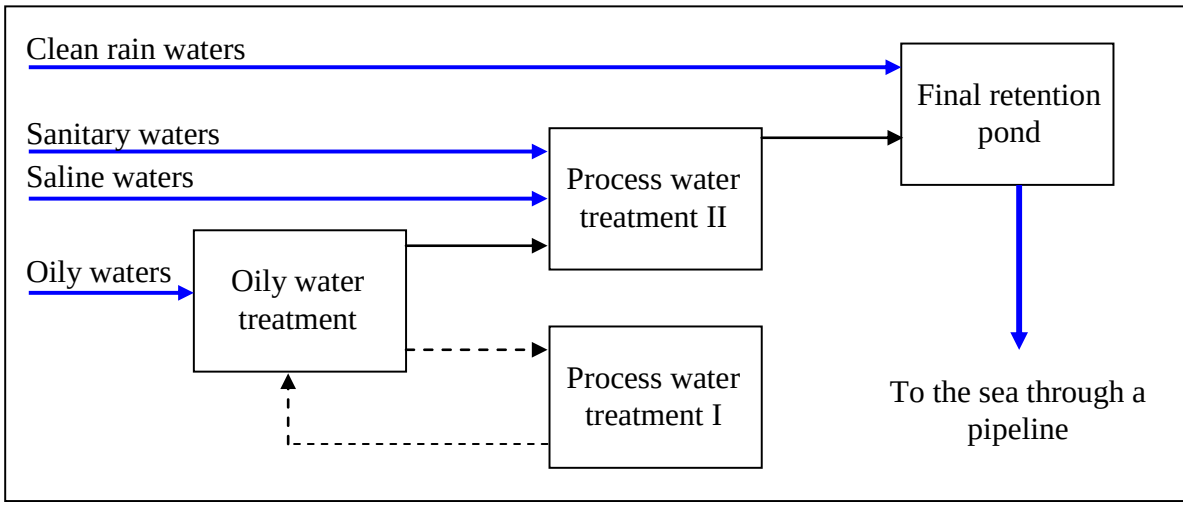

The discharge to the sea is done through a pipeline that follows the same route as the pipeline rack explained at the non technical summary.

The total discharged flow is 7.200 m^3/d, or 2.650.000 m^3/y and the total capacity of the waste water pipeline is 1080 m^3/h.

As all the waste water is treated and discharged together, there is only one final discharging point, located at the following coordinates:

UTM X: 350.000

UTM Y: 4.500.000

The pollutants emitted are:

- Total suspended materials: 50 – 85 mg/l
- Organic matter: 90 – 125 mg of O_2/l
- Conductivity: 2000 – 3000 microsiemens/m^3
- Inhibitory substances: 2 -3 equitox/m^3
- Total N: 12 – 27 mg/l
- Total P: 1,5 – 1,9 mg/l

The parameters that are auto controlled periodically are:

- pH every day
- COD, and total hydrocarbons, every week
- Total suspended materials, conductivity, inhibitory substances, N, P and total organic compounds, eight times a year.

1. Data for the discharge					
Discharge name	General	code	XXXX		
U.T.M. coordinates		X:	350.000	Y:	4.500.000
Municipal/region name	xxx	Code	xxx	Parcel No:	xxx

2. Volume flow, amount and type of waste water for particular stream which is conducted on that discharge				
Kind of stream: industrial, sanitary and rainwater on that discharge				
Stream code	X1	X2	X3	X4
Waste water type (industrial, sanitary, rainwater)	**Industrial**			
Max. amount per day (m^3/day)	**7.200**			
Max. annual amount (Hm^3/year)	**9,46**			
actual annual amount (m^3)	**2.650.000**			
Type of discharging:	**Deep sea discharge**			
Total area collecting rainwater (m^2)	**600.000**			
Destination of the discharge after the treatment[4]	**Sea**			

[4] Please choose one: public sewage with WWTP (PSWWTP) ; inland surface water body (ISWB) ; other (O), in this last case please explain in detail.

WWT operator[5]	**Treatment techniques of the industrial WWT[6]:**			
	Substance/parameter	**Average emission levels after treatment at normal condition, mg/l**	**WWT efficiency[7], %**	**Sludges (liq./sol.), kg**
Refinery	Organic matter	90-120	95%	0
…	…	…	…	…

WWT control status of monitoring system			
Continuous measurement		Discontinuous measurement (key parameters)	
Waterflow, m^3	7200 m^3/d	pH	6-9
		Total suspended materials	50-85 mg/l
		Organic matter	90- 125 mg/l
		Conductiviy	2000 - 3000 microsiemens/m^3
		Inhibitory substances	2-3 equitox/m^3
		Total N	12-27 mg/l
		Total P	1,5 - 1,9 mg/l

As part of the information requested above this table should be completed:

Discharging point	**Pollutant/s**	**Monitoring and Control**				
		No.sample	**Internal/ External[8]**	**Frequency (hourly, daily...)**	**Description**	**Reports**
1	Ph	x	Internal	Daily		
	COD	x		Weekly		
	Total hydrocarbons	x		Weekly		
	Suspended materials	x		8 times a year		
	Conductivity	x		8 times a year		

[5] It can be the same operator as the one of the installation that discharges the wastewaters, or a different one, for example it may be a different operator in Organised Industrial Zones.

[6] Examples: mechanical treatment, chemical treatment, biological treatment.

[7] Specify the efficiency in % of reduction for: (i) COD if it is a physicochemical treatment, (ii) COD or BOD if it is a biological treatment, or Nitrogen if there is nitrification or denitrification.

[8] Here by "internal" it is meant that the monitoring and control is done by the operator of the installation, and "external" means that this task is performed by an external company.

	Inhibitory substances	x		8 times a year		
	N	x		8 times a year		
	P	x		8 times a year		
	Total organic compounds	x		8 times a year		

Indicate the water quality standards that should have the water bodies that receive the discharges of treated wastewater, according to the applicable legislation.

Indicate as well the physical chemical and biological parameters of the receiving water bodies of the effluent from the LCP (upstream and downstream of the discharge point).

ASSESSMENT STUDY OF TOXICITY, PERSISTENCE AND BIOACCUMULATION OF EFFLUENTS

The applicant must specify if there exists some of the following techniques[9] and their scope:

1. Specific analytic measurement (e.g. Semi-Permeable Membrane Device (SPMD), caged mussels, large volume *in situ* sampling);
2. Other water and sediment quality parameters;
3. Tissue analysis using for example mussels and/or fish;
4. Solid phase extraction (SPE) techniques;
5. Biomarkers;
6. Dilution studies using dyes and other markers

6.4. Waste:

<u>Waste management</u>

There is a variable generation of waste in the refinery, that is because non continuous waste is generated in the case study unit or any other unit (in fact, continuous generation of waste only occurs in the waste water treatment plant which generates continuously sludge).

So, waste generation is not continuous but depends on the periodicity of some maintenance operations:

[9] See Chapter 5 of the Guide

- Cleanings that generates oily sludge, ashes and slag.
- Repairs that generates refractory materials, scrap metal, general waste, woods, alumina changes, ion exchange resins, catalyst, etc.
  All that waste may be generated one year and maybe not the next one, or even generated only once every 4 or 5 years.

The following table shows the waste generation and storage for the last year:

Waste	Process where is generated	Production	Storage
Hydrocarbons	Maintenance	22 t	15 t
Oily sludge	Cleaning and maintenance	110 t	30 m^3
Caustic soda	Fuels cleaning	38 t	-
Sludge from water boilers	Boiler water treatment	228 t	500 t
$CaCO_3$	Boiler water treatment	2935 t	500 t
Ashes and dust of boilers	Cleaning of boilers and furnaces	23 t	20 t
Blasting sands	Metallic surface treatments	330 t	330 t
Mineral oil	Lubrication	153 t	-
Containers and packaging	All kind of packaging with rests of dangerous materials	20 t	20 t
Gasoil filters	Filtration	4 t	4 t
Laboratory products	Laboratory analysis	0,2 t	0,2 t
Lead batteries	Batteries, cells, and others with lead	1.5 t	1.5 t
Alumina waste	Catalyst change	35 t	35 t
Wasted catalyst	Catalyst change	94 t	50 t
Refractory material	Refractory maintenance	90 t	200 t
Dirty grit	Maintenance	30 t	100 t
Isolation material	Isolation maintenance	48 t	30 t
Dried sludge from WWTP	Waste water treatment plant	380 t	100 t
Ion exchange resins	Water treatment	8 t	12 t
Paper and cardboard	General waste	6 t	6 t
Fluorescent tubes	General waste	4 t	3 t
Domestic batteries	General waste	0,4 t	0,4 t
Wood	Packaging	42 t	60 m^3
Plastic	Packaging and general waste	7 t	7 t
Metal scrap	Maintenance operations	500 t	200 t
General waste	General waste	1200 t	10 t

6.5 Soil and groundwater protection:

There is a monitoring plan to check if a soil pollution is produced. Some general studies of soil have been done including the following actions:

- Electromagnetic induction geophysical prospection
- Georadar prospection
- ROST (rapid optical screening tool) prospection
- And mechanical prospection with the construction of 41 piezometers

In some groundwater were detected dissolved hydrocarbons, but not free layer presence. Non polluted water downstream was found.

There is a prevention program with the following issues:

- Maintenance of existing storage tanks, with the objective of failure detection and correction, mainly at bottom of tanks before a hypothetical accidental release.
- In new tanks construction, take special care of soil protection. Under the metallic part, there is a disposal of different layers of sand, silt and fiber and plastic to ensure that if there is a leakage it will not pollute the soil. In addition, some witness tubes are installed at the surroundings of the tank to check rapidly if there is a release.
- Underground pipelines maintenance to avoid corrosion. Some hydraulic test are practiced to check if there is a pore. If it is possible, underground pipelines are converted to aerial pipelines.
- Periodical monitoring for the 41 piezometers network.
- Cathodic protection of underground pipelines to avoid corrosion. There is a program to protect all the lines, until know, there are a 66% of protected lines.

6.6. Operation under not normal conditions:

- Description of the operation modes different from the normal operation (start-up and shut-down operations, leaks, malfunctions, momentary stoppages, definitive cessation of operations, etc) and of the situations which cause them.
- Expected emissions under those circumstances (pollutants and concentrations).
- Expected percentage of operation under those circumstances (hours/year).
- Special measures planned to be followed under those circumstances and goals to be achieved by taking those measures.
- Systems for the monitoring and control of parameters under those circumstances.
- Description of the operation under emergency situations.

OTHER DOCUMENTATION DIFFERENT FROM THE PROJECT REPORT

i. **Environmental Impact Assessment (EIA) Report according to the legislation on the environmental impact assessment to the Competent Authority and after its acceptance preparation of the EIA report and project presentation file**(if applicable to the installation, taking into account if it is a new or existing installation)**.** The report is the one mentioned in article 11 of the EIA By-Law 26939.

ii. **A report from the competent administration responsible of development plans and landscape planning in which the site for the installation is located, evidencing compatibility of the project with urban planning provisions.** If the applicant applied for such report to that competent administration and no report is provided within 40 working days, that report shall be replaced by the applicant with a copy of the application for the report. In any case, if the urban report is negative, the Competent Authority will bring the permit procedure to an end.

iii. **A report from the Competent Authority on control of major-accident hazards involving dangerous substances, classifying the activity according to the legislation.**

iv. **Identification of the information which the applicant deems to be confidential under the provisions in force.** When assessing this point, the applicant should take into account that the application will be submitted to public information during 15 working days, plus the legislation applicable.

v. **Any other documentation evidencing compliance with the requirements under the applicable environmental legislation on obligatory security or insurance**.

vi. **Any other documentation evidencing compliance with the requirements under the applicable environmental legislation.**

vii. **Any other documents required by the Competent Authority.**

Annex VI "Dispersion Model Example" (it is a summary of a real one)

1.- Dispersion model goal

2.- Atmospheric dispersion models used

3.- The turbulent diffusion and the Gaussian model

- **3.1.- The turbulent diffusion model**
- **3.2.- The Gaussian distribution**
- **3.3.- The Gaussian dispersion model**

4.- Scenario definition and data used

- **4.1.- Scenarios**
- **4.2.- Data**
- **4.3.- Receiving network data**
- **4.4.- Weather scenarios**

5.- Results

- **5.1.- Annual average concentration**
- **5.2.- Daily average concentracion**
- **5.3.- Hourly maximum concentration with atmospheric stability D & F**

6.- Values and results interpretation

7.- Summary and conclusions

1.- Dispersion model Goal

The aim of this dispersion study is to evaluate the effect of the refinery emissions on the air quality of the area, and to continue and improve the study made two years before.

Data used is obtained from the refinery itself and from an official emission control organization.

2.- Atmospheric dispersion models used

The prediction of a pollutant emission effect on air quality requires the use of a mathematical model for transport and dispersion of pollutants. Independently of whether the emission is punctual or continuous, every acceptable model must take into account the weather conditions of the receiving environment, and the model must forecast how the pollutant is transported, and how it is dispersed in the environment. Secondly, the model must include the different mechanisms involved in these situations, as: advection, convection, mechanical and thermal turbulent dispersion, molecular diffusion, chemical reactions, and also the initial conditions and boundary characteristics to take into account the physical interaction with the surroundings (for example if there is a complex orography).

From a scientific point of view, the necessary knowledge to predict the dispersions of the pollutants is perfectly established. But the situation found in practiceis an extremely complex model, that can only be solved by organizations with powerful computational facilities. To avoid this problem, there are several approximations to simplify the model but maintaining an acceptable precision. Among these approximations, the Industrial Source Complex model (approved and recommended by the Environmental Protection Agency (EPA)) based on Gaussian models of dispersion, has become the most popular and has been accepted as a legal model.

The Industrial Source Complex model can be operated under short term and long term conditions. In this model, atmospheric pollution emitted through the stacks is modeled with Gaussian plumes which do not change in time (steady state). The plume direction, the height and the width depend on atmospheric conditions and the stack. Although the emissions are evaluated in the steady state, the program is able to make temporal averages and therefore evaluate some situations as a function of time.

The Industrial Source Complex model has been used in this study, concretely the short term model has been used to predict the daily and hourly averages, and the long term model has been used to predict annual averages.

3.- The turbulent diffusion and the Gaussian model

3.1.- The turbulent diffusion model

Is the most complex approach to the pollutant transport theory and involves the concept of "mixing length". That is the most simple point in the development of an atmospheric dispersion model. The basic equation of this model is mathematically complex, but it could be simplified with non relevant assumptions to the following expression:

$$\frac{dC}{dt} = K_{XX}\left(\frac{\partial^2 C}{\partial x^2}\right) + K_{YY}\left(\frac{\partial^2 C}{\partial y^2}\right) + K_{ZZ}\left(\frac{\partial^2 C}{\partial z^2}\right)$$

Where "C", is the concentration, t, is time, and the K_{ii} are the coefficients of turbulent diffusion in the three axis of coordinates. That is the Flick's equation and even with assumptions it is very difficult to apply, so more assumptions are usually done to simplify the model:

- The concentration of the pollutant come from a continuous source
- The process is in steady state or tends to be in this state (this means, dC/dt=0) (but some estimations on non steady state conditions are done by running the model again and again.)
- Normally the principal wind transport direction is associated to "x" axis.
- The wind velocity "u" is selected to be constant in any given coordinates system point "x, y, z".
- The transport of pollutants in "x" direction is the most important so the descendant diffusion is negligible, that is: u(dC/dt) >>> K_{xx} (d^2C/dx^2)

With all these simplifications the Flick's models becomes:

$$u\frac{\partial C}{\partial x} = K_{yy}\frac{\partial^2 C}{\partial y^2} + K_{zz}\frac{\partial^2 C}{\partial z^2}$$

With different values of "K". The solution of this equation must also be accordant to the following boundary conditions:

- When x=0, the concentration is infinite (That is: the concentration is very high at source point).
- When x=infinite, the concentration tends to be 0
- K_{zz}(dC/dz) tends to 0 when z=0 (no superficial diffusion)

$$\int_{0}^{\infty}\int_{-\infty}^{\infty} uC(x,y,z)dydz = Q$$

- when x>0, the rate of pollutant transport in the wind direction is constant and equal to the rate of pollutant emission at the source "Q".

Lowry and Boubel give an approximate solution to the previous equation:

$$C(x,y,z) = \frac{Q}{4\pi r(K_{yy}K_{zz})^{\frac{1}{2}}} \exp\left[\frac{-u}{4x}\left(\frac{y^2}{K_{yy}} + \frac{z^2}{K_{zz}}\right)\right]$$

where $r^2 = x^2 + y^2 + z^2$.

Unfortunately, the previous equation shows two important deviations when compared with experimental evidences along the axis line. At ground level, along the axis line, the previous equation is reduced to:

$$C(x,0,0) = \frac{Q}{4\pi x(K_{yy}K_{zz})^{\frac{1}{2}}}$$

And this will means that "C" at ground level and along the axis line of the plume is inversely proportional to "x" and completely independent of wind speed "u".

But the experimental observations show that this is not true. The concentration seems to be inversely proportional to "$ux^{1.76}$". There are continuous studies to search for better approximate solutions to the turbulent diffusion model. Nowadays, the most accepted model is the Gaussian plume model.

3.2.- The Gaussian distribution

To understand the Gaussian distribution model it is important to know how it is in terms of statistics.

It is said that a variable "x" is "normally distributed" or "Gaussian distributed" if its density function f(x) is as follows:

$$f(x) = \frac{1}{\sigma(2\pi)^{\frac{1}{2}}} \exp\left[\frac{-(x-\mu)^2}{2\sigma^2}\right]$$

Where "μ" is any real number and "σ" is any real number greater than 0. "μ" is known as normal deviation. The nature of this functions is better understood

when is shown in a chart. The value of "μ" is the maximum of the function and the curve is symmetrical from the position of "μ".

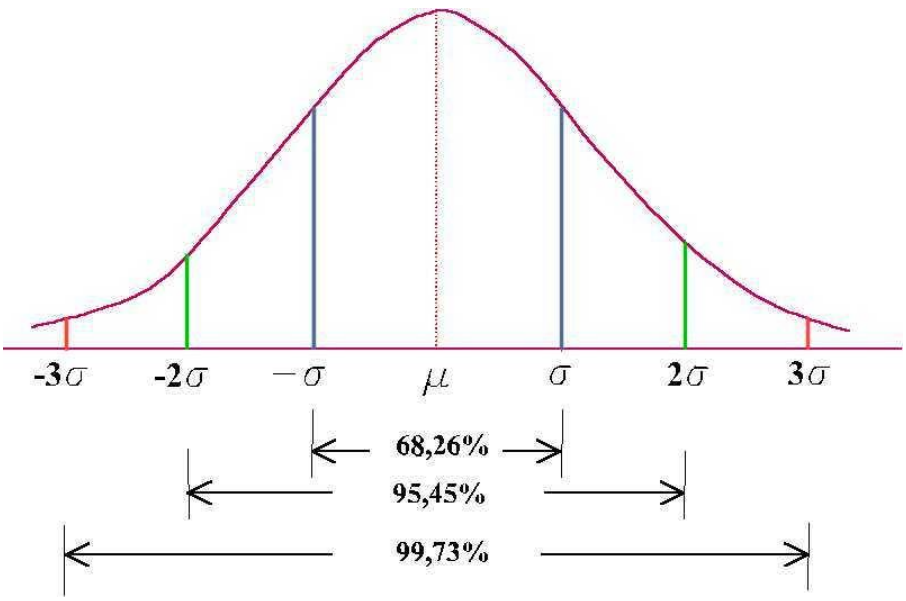

This expression is a normalized form, meaning that the area under the curve is equal to the unit. A change in "σ" is only going to modify the form of the curve but not the area. The normal deviation is a measure of the point of inflexion at every side of the curve.

In an atmospheric dispersion model, normally, the dispersions follows a double Gaussian distribution in two directions as "y" and "z", so the result is to multiply every simple Gaussian distribution in every direction:

$$f(y,z) = \frac{1}{2\pi\sigma_y\sigma_z}\exp\left[\frac{-(y-\mu_y)^2}{2\sigma_y^2} + \frac{-(z-\mu_z)^2}{2\sigma_z^2}\right]$$

Where "σ_z" and "σ_y" and "μ_z" and "μ_y" have the same meaning as in a simple Gaussian distribution. This is the formula that will be applied to explain the Gaussian dispersion model in the next point.

3.3.- The Gaussian dispersion model

A mathematical model of atmospheric dispersion must try to predict the evolution as a whole of the plumes emitted from ground level or from a stack. As an example for a punctual source, e.g. a stack, the general scheme of a plume could be represented as:

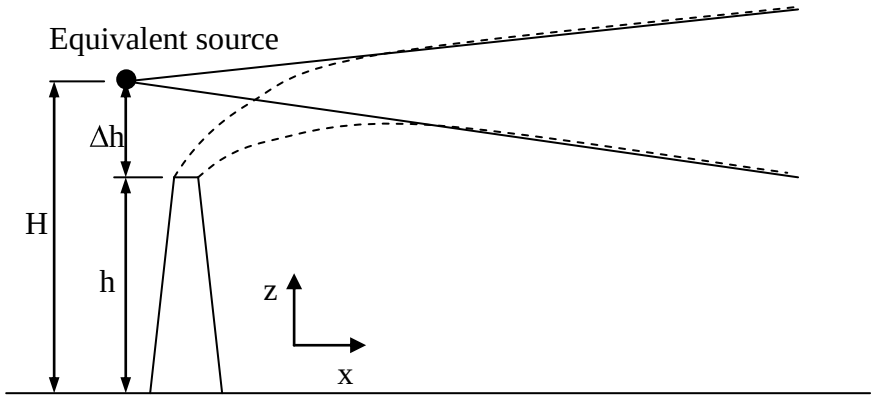

Although the plume has his origin at "h" (stack height), its height is increased an additional "Δh" because of the flotation capacity of hot gases and the amount of movement of gases going out vertically through the stack at "Vs" speed. Therefore, and to put it practically, the plume appears as it has been originated in a point with height equal to H = h + Δh. This point is also located a little before the stack through the x position.

Some additional simplifications are assumed:

- Steady state
- Negligible mass diffusion through "x" direction
- Constant wind speed, "u"
- Constant diffusivity of mass Dx, Dy, and Dz
- The distance between the real source and the equivalent source is negligible, so the system will act as if there was a "virtual source" at x=0 and y=H.

If we assume these simplifications, the concentration profile can be represented with the following expression:

$$C = Kx^{-1} \exp\left[-\left(\frac{y^2}{D_y} + \frac{z^2}{D_z} \right) \frac{u}{4x} \right]$$

Where "K" is an arbitrary constant that is determined by the boundary conditions of every specific atmospheric problem. There are additional simplifications for ground level and above-ground level emissions without taking into account the reflection.

4.- Scenario definition and data used

4.1.- Scenarios

The immission values calculation has been done using the emission data of the refinery and the emission data obtained through an environmental competent authority.

4.2.- Data

The necessary data of emission for every stack is:

- UTM coordinates (m)

- Height (m)

- Diameter (m)

- Velocity or volumetric flow rate (m/s or m^3/min)

- Temperature of gases (at the exit of the stack) (K)

- Kinds and characteristics of emitted pollutants

- Emission flow rate for each pollutant (g/s)

The characteristics of every stack are shown in the next table:

Stack	Diameter (m)	Height (m)	Coordinates (m)	Velocity (m/s)	T (K)	SO_2 Emission (g/s)	NO_X Emission (g/s)	PST Emission (g/s)
General	7,76	113,8	X: 351.000 Y: 4.550.000	4,45	560	17,73	3,56	0,5
And the rest of the stacks…								

There is also a table with the emission values provided by an environmental competent authority.

Stack	Diameter (m)	Height (m)	Coordinates (m)	Velocity (m/s)	T (K)	SO_2 Emission (g/s)	NO_X Emission (g/s)	PST Emission (g/s)
General	7,76	113,8	X: 351.000 Y: 4.550.000	6,98	560	17,64	0,01	1,03
And the rest of the stacks…								

4.3.- Receiving network data

It is necessary to choose a proper zone for the study and describe it with a point network with their coordinates.

With the goal of comparing the results of the study with the registered values of air quality measured by the air quality network system, the receiving network includes the four automatic stations in the zone.

The dimensions of the network are 2350 x 3200 m, with the origin in the point X:350.000, Y:4.550.000

And the approximate coordinates of the four automatic air quality stations in the area are:

- Station 1: X: 351.000, Y:4.551.000
- Station 2: X: 352.000, Y:4.552.000
- Station 3: X: 353.000, Y:4.553.000
- Station 4: X: 354.000, Y:4.554.000

In Annex I can be found a map with the situation of these stations.

The results of the model (short term and long term mode) give the average concentrations of immission in every point of the network.

To obtain the hourly concentrations a hypothetical wind direction and velocity must be decided, because there is no average data representative of this period. The data used has been chosen to provide the results in the worst case and using the worst weather conditions.

4.4.- Weather scenarios

The weather conditions affect the dispersion of atmospheric pollutants, so the results will be very dependant on wind velocity and direction and atmospheric stability, and a little less dependant on humidity and temperature.

The weather data is obtained from the meteorological service of the zone. The characteristics of the meteorological data can be checked at Annex II.

To evaluate the dispersions of atmospheric pollutants will be used the long term model, that requires the use of the "Annual Stability Pasquill Matrix".

The "Annual Stability Pasquill Matrix" is a matrix of 16x6x6 with 16 types for the wind direction, 6 types for wind velocity and the 6 categories of Pasquill's stability.

The 16 types for the wind direction are sectors of $22{,}5^0$ named as N, NNE, NE, ENE… and so on, and define the origin of the wind, for example a north wind (N) blows from north to south.

The 6 types for wind speed are:

- Category 1: Wind speed < 1 m/s
- Category 2: 1 ≤ Wind speed < 3 m/s
- Category 3: 3 ≤ Wind speed < 5 m/s
- Category 4: 5 ≤ Wind speed < 7 m/s
- Category 5: 7 ≤ Wind speed < 9 m/s
- Category 6: 9 ≤ Wind speed

And the 6 categories of Pasquill's stability are:

- A: Extremely unstable
- B: Moderately unstable
- C: Slightly unstable
- D: Neutral
- E: Slightly stable
- F: Moderately stable

The numerical results are shown in Annex III.

To obtain the results for daily average the matrix has been filled with the standard values of stability.

To obtain the results for hourly maximums the matrix has been filled with the stability values for stability type F and type D, with a slow wind speed (2 m/s) because this data is the worst scenario for pollutants dispersion.

5.- Results

In this part of the study are shown the values obtained from running the model.

5.1.- Annual average concentration

The results of annual average immission values calculated using the refinery concentration data are:

Station	Location	SO_2 (mg/m^3)	NO_X (mg/m^3)	PST (mg/m^3)
Station 1:	X:351.000 Y:4.551.000	2,01	1,35	0,04
Station 2:	X:352.000 Y:4.552.000	2,30	1,60	0,05
Station 3:	X:353.000 Y:4.553.000	1,25	0,70	0,03
Station 4	X:354.000 Y:4.554.000	2,12	1,59	0,05

And the same results using the external concentration data are:

Station	Location	SO_2 (mg/m^3)	NO_X (mg/m^3)	PST (mg/m^3)
Station 1:	X:351.000 Y:4.551.000	1,40	0,16	0,35
Station 2:	X:352.000 Y:4.552.000	1,64	0,19	0,44
Station 3:	X:353.000 Y:4.553.000	0,83	0,11	0,19
Station 4	X:354.000 Y:4.554.000	1,34	0,15	0,32

5.2.- Daily average concentration

The results of daily average immission values calculated using the refinery concentration data are:

Station	Location	SO_2 (mg/m^3)	NO_X (mg/m^3)	PST (mg/m^3)
Station 1:	X:351.000 Y:4.551.000	3,15	1,57	0,07
Station 2:	X:352.000 Y:4.552.000	3,68	1,97	0,02
Station 3:	X:353.000 Y:4.553.000	3,09	2,16	0,07
Station 4	X:354.000 Y:4.554.000	2,56	1,86	0,07

And the same results using the external concentration data are:

Station	Location	SO_2 (mg/m^3)	NO_X (mg/m^3)	PST (mg/m^3)
Station 1:	X:351.000 Y:4.551.000	2,35	0,28	0,46
Station 2:	X:352.000 Y:4.552.000	1,13	0,16	0,03
Station 3:	X:353.000 Y:4.553.000	2,61	0,18	1,29
Station 4	X:354.000 Y:4.554.000	1,49	0,13	0,39

5.3.- Hourly maximum concentration with atmospheric stability D & F

The results of hourly average immission values calculated using the refinery concentration data, and considering stability **type D** are:

Station	Location	SO_2 (mg/m^3)	NO_X (mg/m^3)	PST (mg/m^3)
Station 1:	X:351.000 Y:4.551.000	41,12	32,90	1,09
Station 2:	X:352.000 Y:4.552.000	48,30	36,30	1,24
Station 3:	X:353.000 Y:4.553.000	38,09	31,18	1,02
Station 4	X:354.000 Y:4.554.000	22,07	19,30	0,56

The results of hourly average immission values calculated using the refinery concentration data, and considering stability **type F** are:

Station	Location	SO_2 (mg/m^3)	NO_X (mg/m^3)	PST (mg/m^3)
Station 1:	X:351.000 Y:4.551.000	17,5	9,13	0,34
Station 2:	X:352.000 Y:4.552.000	20,69	11,96	0,43
Station 3:	X:353.000 Y:4.553.000	15,67	8,08	0,31
Station 4	X:354.000 Y:4.554.000	7,90	3,40	0,15

And the same results using the external concentration data and considering stability **type D** are:

Station	Location	SO_2 (mg/m^3)	NO_X (mg/m^3)	PST (mg/m^3)
Station 1:	X:351.000 Y:4.551.000	23,10	3,16	3,35
Station 2:	X:352.000 Y:4.552.000	29,77	4,11	4,81
Station 3:	X:353.000 Y:4.553.000	20,58	2.78	2,84
Station 4	X:354.000 Y:4.554.000	9,94	1,05	0,93

And considering stability **type F** the results are:

Station	Location	SO_2 (mg/m^3)	NO_X (mg/m^3)	PST (mg/m^3)
Station 1:	X:351.000 Y:4.551.000	6,35	0,46	0,59
Station 2:	X:352.000 Y:4.552.000	8,24	0,66	0,80
Station 3:	X:353.000 Y:4.553.000	5,62	0,39	0,52
Station 4	X:354.000 Y:4.554.000	2,21	0,12	0,24

6.- Values and results interpretation

The results obtained for annual, daily and hourly average immission values calculated using the refinery concentration data, and compared for each pollutant with the real value (registered value in the station) and the legal limit are shown in Annex IV. As an example the tables are as follows:

Average annual immission of SO_2			
Station	Calculated immission from model ($\mu g/m^3$)	Registered value in the station ($\mu g/m^3$)	Legal limit ($\mu g/m^3$)
Station 1	2,01	19	20 limit for ecosystem protection (not for human protection)
Station 2	2,3	16	
Station 3	1,25	15	
Station 4	2,12	26	

And the same tables for all the pollutants and also daily and maximum hourly values.

7.- <u>Summary and conclusions</u>

From all data in this study it can be concluded that:

- In general, the immission values caused by the refinery are less than two years before: Annual and daily immission values of SO2 are 50-60% less than the last study, NOx values are 50% less and particulate matter are three times less.
- The global impact of SO_2 refinery emissions in the overall quality level in daily average are between 10-16% (depending if data used are from the refinery or external).
- The global impact of SO_2 refinery emissions in the overall quality level in hourly average with atmospheric stability D are between 9-17% (depending if data used are from the refinery or external).
- The global impact of SO_2 refinery emissions in the overall quality level in hourly average with atmospheric stability F are between 3-7% (depending if data used are from the refinery or external).
- The global impact of NO_X refinery emissions in the overall quality level in annual average are between 6%.
- The global impact of NO_X refinery emissions in the overall quality level in hourly average with atmospheric stability D are 31%.
- The global impact of NO_X refinery emissions in the overall quality level in hourly average with atmospheric stability F are 8%.

- The global impact of PM refinery emissions in the overall quality level in annual, or even daily or hourly averages are, in the worst case, less than 1%, so it can be concluded that there are no effects on air quality.